ROLLER AIR BEARINGS

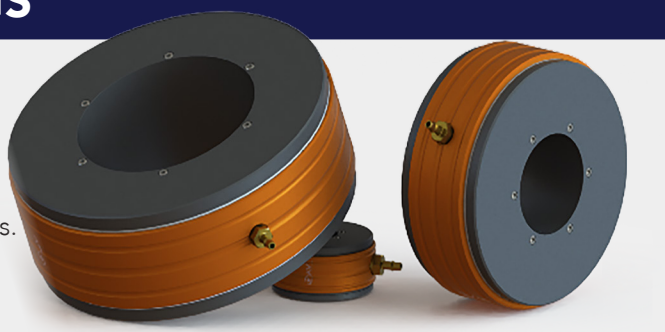

OAV Roller Air Bearings

Roller Air Bearings are a breakthrough innovation from OAV Air Bearings. They are an ultraprecise, hard-installable replacement for conventional bearings. The result is no friction, no contact, no maintenance, no heat generation at high speeds, and an indefinite operating life.
OAV Air Bearings have high stiffness and excellent geometric performance. OAV ® Roller Air Bearings preload both horizontal and vertical surfaces with an opposing thin film of pressure. This maintains the perfect gap with ultimate precision. OAV ® Air Bearings surface design equally distributes the air and preloads it over the entire surface area. The result is outstanding stiffness and maximized performance.

Part Number	Size	Input Pressure	Radial Load Max	Flow Rate	Axial Load Max	Bearing Inside Diameter (ID)	Bearing Outside Diameter (OD)	Bearing Width	Bearing Weight	Axial and Radial Error Motion
OAVRL13M	13 mm ID	40 psi - 100 max psi	28.8 N (6.5 lbs)	12.2 SCFH	120 N (27 lbs)	13 mm + .01/-.00	44.5 mm +.00/-.01	22 mm	.17lbs	1.1 µin/ (0.027 µm)
OAVRL20M	20 mm ID	40 psi - 100 max psi	100.5 N (22.6 lbs)	15 SCFH	378.1 N (85.0 lbs)	20 mm + .01/-.00	70 mm +.00/-.01	31.8 mm	.58 lbs	0.9 µin/ (0.023 µm)
OAVRL25M	25 mm ID	40 psi - 100 max psi	127.2 N (28.6 lbs)	15.5 SCFH	689.5 N (155 lbs)	25 mm + .01/-.00	90 mm +.00/-.01	34.9 mm	1.1 lbs	0.9 µin/ (0.023 µm)
OAVRL40M	40 mm ID	40 psi - 100 max psi	250.0 N (56.2 lbs)	16.1 SCFH	822.9 N (185.0 lbs)	40 mm + .01/-.00	100 mm +.00/-.01	41.3 mm	1.4 lbs	1.1 µin/ (0.027 µm)
OAVRL50M	50 mm ID	40 psi - 100 max psi	311.8 N (70.1 lbs)	39.3 SCFH	778.4 N (175.0 lbs)	50 mm + .01/-.00	110 mm +.00/-.01	44.5 mm	2.7 lbs	1.1 µin/ (0.027 µm)
OAVRL75M	75 mm ID	40 psi - 100 max psi	555.1 N (124.8 lbs)	26 SCFH	1156.5 N (260.0 lbs)	75 mm + .01/-.00	140 mm +.0000/-.01	50.8 mm	2.9 lbs	1.1 µin/ (0.027 µm)

Part Number	Size	Input Pressure	Radial Load Max	Flow Rate	Axial Load Max	Bearing Inside Diameter (ID)	Bearing Outside Diameter (OD)	Bearing Width	Bearing Weight	Axial and Radial Error Motion
OAVRL0500	0.500 in ID	40 psi - 100 max psi	6.5 lbs (28.9 N)	5 SCFH	27.0 lbs (120.1 N)	0.500 in +.0005/-.0000	1.7500 in +.0000/-.0005	.865 in	.17 lbs	0.9 µin/ (0.023 µm)
OAVRL0750	0.7500 in ID	40 psi - 100 max psi	22.6 lbs (100.5 N)	15 SCFH	85 lbs (378.1 N)	0.7500 in +.0005/-.0000	2.7500 in +.0000/-.0005	1.250 in	.58 lbs	0.9 µin/ (0.023 µm)
OAVRL1000	1.000 in ID	40 psi - 100 max psi	28.6 lbs (127.2 N)	15.5 SCFH	155 lbs (689.5 N)	1.0000 in +.0005/-.0000	3.5000 in +.0000/-.0005	1.375 in	1.1 lbs	0.9 µin/ (0.023 µm)
OAVRL1500	1.500 in ID	40 psi - 100 max psi	56.2 lbs (250.0 N)	16.1 SCFH	185.0 lbs (822.9 N)	1.500 in +.0005/-.0000	4.0000 in +.0000/-.0005	1.625 in	1.4 lbs	1.1 µin/ (0.027 µm)
OAVRL2000	2.000 in ID	40 psi - 100 max psi	70.1 lbs (311.8 N)	17.5 SCFH	175.0 lbs (778.4 N)	2.0000 in +.0005/-.0000	4.2500 in +.0000/-.0005	1.750 in	1.7 lbs	1.1 µin/ (0.027 µm)
OAVRL3000	3.000 in ID	40 psi - 100 max psi	124.8 lbs (555.1 N)	31 SCFH	260.0 lbs (1156.5 N)	3.0000 in +.0005/-.0000	5.5000 in +.0000/-.0005	2.000 in	2.9 lbs	1.1 µin/ (0.027 µm)

Roller Air Bearing Design and Installation Guide

The basic method to mount the OAV ® Roller Air Bearing is to transition fit both the OD and ID. If more than one bearing is used, a spacer may be inserted to secure the overall fit. Another means of installation is the injection method. Use an epoxy injection nozzle inserted in the housing epoxy port to inject after the bearing is installed in the housing for a permanent and secure installation.

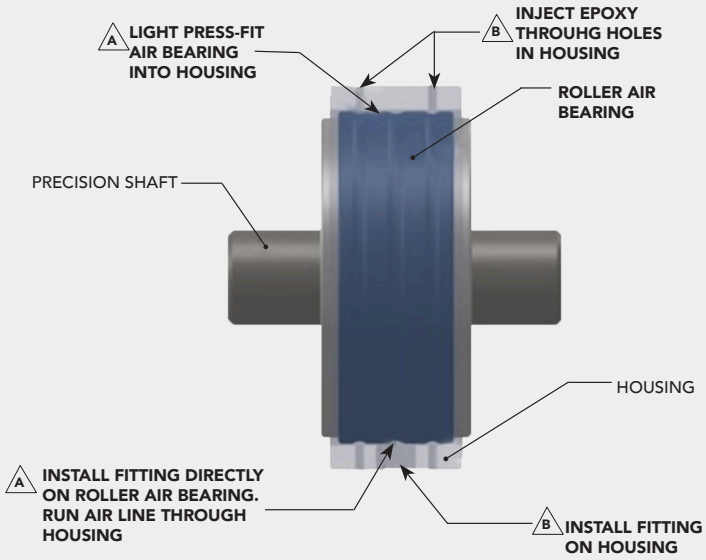

It is crucial to avoid misaligning the bearings in the seats, and that the mounting loads are never applied through the side plate of the bearing. As shown below, the force should be applied to the face of the bearing itself (the middle component).

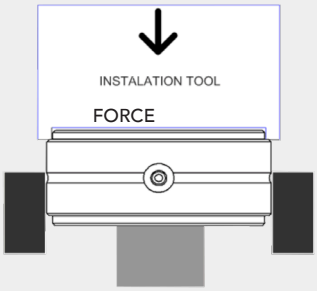

OAV® Roller Air Bearings			Metric Tolerance Value in Millimeter	
Application	Desired Fit Type	Desired Fit	Use Shaft Diameter	Use Housing Diameter
Preloaded Assemblies	Bonding (No adhesive air port)	.010 to .020	d - .015 d - .020	D +.010 D +.015
Low speed, or spring pre-load	Loose	.002 to .012	d - .007 d - .012	D +.002 D +.007
Medium Speed	Transition	.005 to .005	d - .000 d - .005	D - .000 D - .005
High Speed	Light Press	.000 to .010	d +.005 d -.000	D - .005 D - .010

1. *Interference factor may affect final dimension.*
2. *Add relative thermal expansion*
3. *Tight press not recommended for OAV Roller Air Bearing*

Typical Configurations And Design

Roller Air Bearings are light press-fitted into position on the shaft. A housing can be used to hold the roller air bearing. If a customer-designed housing is used, contact OAV for the bore size recommendation.

The roller bearing consists of the frictionless bearing and face collars all in one part. Therefore, the length of the bearing will be the length of the bearing system. The Roller Air Bearings have the same design guidelines as the Thrust Air Bushings.

Installing Into OAV Standard Housing Block

To mount the OAV Roller Air Bearing with its standard OAV housing, prepare the mounting surface by cleaning it free of debris and ensuring the surface is level and flat. Start by attaching the bottom piece housing, then carefully lower the bearing into the housing. Ensure proper alignment and fit. Add the top piece of the housing and press fit onto the roller air bearing to clip it to its bottom piece. Make sure the thread port of the roller air bearing is aligned with the top housing piece.

Add the screws and create your final adjustments by securely fastening the housing. Be sure not to overtighten the screws, as it can affect alignment. Perform a functionality test and ensure proper alignments.

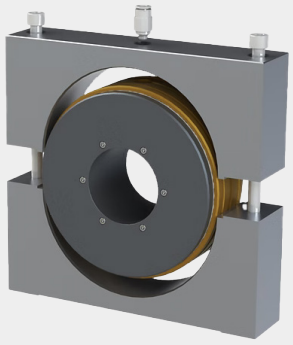

Figure. Graphical process depiction of OAV Roller Air Bearing mounted into its OAV Standard Roller Air Bearing Housing with thread port aligned with housing air hose entrance. Once top and bottom components are clicked, screw in to adjust as needed.

CONTACT US

www.oavco.com - Princeton, USA
Email: support@oavco.com
Phone: +1 609 454 5340