LINEAR AIR BEARINGS



OAV Linear Slide Assemblies redefine precision motion technology by eliminating friction through non-contact air bearing systems. These slides integrate a porous carbon media air bearing, lightweight aluminum components, and a precision-ground guide rail to deliver unmatched performance in smooth linear motion.

At the core of OAV's design is porous material technology, which generates an ultra-thin, uniform layer of pressurized air between the bearing face and guide surface. This innovative approach not only minimizes resistance but also ensures exceptional stiffness, precision, and repeatability—down to nanometer-level accuracy.
The unique porous carbon substrate promotes consistent airflow, optimizing efficiency while enhancing durability. With its robust, crash-resistant construction, the OAV Linear Slide Assembly stands out as the ideal solution for applications demanding high precision, low maintenance, and superior reliability.
OAV Air Bearings offers high-performance linear guides designed for maximum precision and durability. Whether your application requires motorized solutions with direct drive motors or non-motorized systems, our linear guides deliver frictionless, smooth motion with exceptional reliability.
OAV Profile Rail Guides consist of next generation OAV technology and is manufactured using aerospace quality material. OAV Air Bearing Guides include the Box Series, T-Series, U-Series, and the Dovetail Series. OAV Air Bearings offers a wide range of styles, sizes and unique features produced for easy retrofitting into both new and existing applications.
Direct Drive Motor Option:
Achieve precise, backlash-free motion with direct drive technology.
Ideal for high-speed, high-torque applications that demand extreme accuracy.
Non-Motorized Option:
Provides the same high precision without the need for an integrated motor, perfect for manual or external drive systems.

Standard OAV Air Bearing Guide Tolerances
Local Straightness: .25 µ per 25 mm travel with a maximum error of 2 µ per 1000 mm travel

Dovetail-Series 150-150

Part Number	Local Straightness	Max. Error	Assembly Height	Total Weight	Z Direction Load	Y Direction Load	Air Flow	Pitch	Roll	Yaw	Y Stiffness	Z Stiffness
DOV150150	.25 µm per 25 mm travel	2 µm per 1000 mm travel	55 mm	1.95 kg (4.2 lb) (100 mm travel)	352 lb (1565 N)	304 lb (1352 N)	17 NLPM	285 lbs-in (32 N-m)	324 lbs-in (37 N-m)	140 lbs-in (16 N-m)	670 N/µ	730 N/µ

The OAV 150 mm x 150 mm Dovetail Rail Guide is engineered for nano-precision motion and is available with or without Direct Drive Motors, depending on your application's needs. This guide offers unmatched accuracy and frictionless motion, making it perfect or high-precision tasks across various industries.

- Nano Precision with Direct Drive Motors:
  - o Provides seamless, backlash-free movement with exceptional accuracy
  - o Ideal for high-speed, high-torque applications requiring maximum precision.
  - o Direct drive motors ensure smooth, continuous motion with zero backlash.
- Nano Precision without Direct Drive Motors:
  - o Offers the same high precision without an integrated motor, perfect for manual or externally driven systems.
  - o Ensures accurate positioning and frictionless operation.
- Aerospace-Grade Construction:
  - o Manufactured from premium materials for durability and long-term performance.
  - o Compact 150 mm x 150 mm design ensures easy integration into various systems.
- Frictionless, Maintenance-Free Operation:
  - o The air bearing design minimizes wear, ensuring low maintenance and reliable performance over time. Whether your system requires Direct Drive Motors for high-speed precision or a non-motorized setup, the OAV 150 mm x 150 mm Dovetail Rail Guide offers the flexibility and accuracy needed for advanced motion control solutions.

Dovetail-Series 150-300

Part Number	Local Straightness	Max. Error	Assembly Height	Total Weight	Z Direction Load	Y Direction Load	Air Flow	Pitch	Roll	Yaw	Y Stiffness	Z Stiffness
DOV150300	.25 µm per 25 mm travel	2 µm per 1000 mm travel	55 mm	3.89 kg (8.5 lb) (200 mm travel)	704 lb (3130 N)	608 lb (2704 N)	23 NLPM	950 lbs-in (107 N-m)	990 lbs-in (112 N-m)	396 lbs-in (45 N-m)	1609 N/µ	2176 N/µ

OAV 150 mm x 300 mm Dovetail Rail Guides: Nano Precision Motion With or Without Direct Drive Motors

The OAV 150 mm x 300 mm Dovetail Rail Guides are designed for applications requiring nano-precision motion, offering both motorized and non-motorized configurations. Whether your system requires Direct Drive Motors for ultra-precise, backlash-free motion, or you prefer a non-motorized setup, these rail guides deliver exceptional accuracy and reliability.

- Nano Precision with Direct Drive Motors:
  - o Achieve ultra-precise, backlash-free movement.
  - o Ideal for high-speed, high-torque applications where precision is critical.
  - o Smooth, seamless motion with zero mechanical backlash.
- Precision without Direct Drive Motors:
  - o Provides the same high level of precision without the need for an integrated motor.
  - o Perfect for manual or externally driven systems requiring frictionless, accurate positioning.
- Robust Construction:
  - o Made from premium aerospace-grade materials for durability and long-lasting performance.
- Low Maintenance and High Load Capacity:
  - o Engineered to handle high loads with minimal maintenance thanks to OAV's frictionless air bearing technology. The OAV 150 mm x 300 mm Dovetail Rail Guides provide an ideal solution for industries demanding the highest levels of precision, whether for manual applications or fully motorized systems.

LINEAR AIR BEARING DESIGN AND INSTALLATION GUIDES

OAV Linear Air Bearing Guide series, which includes the Box Series, T-Series, U-Series, and the Dovetail Series, offers a wide range of styles, sizes and unique features. The installation and design process allows for easy retrofitting into both new and existing applications.
The installation of the OAV Linear Air Bearing Guides suggests attention to detail and precision to ensure optimal performance. Planning, preparation, and execution are essential to achieving the desired outcome. Deviation from these guidelines may lead to a system that does not meet the required standards of precision and stability.

Dovetail Series

Firstly, consider the installation area. The area should provide a flat, stable, and unobstructed surface that is free from contaminants. The linear air bearing guides and all related components should be cleaned using only isopropyl alcohol to remove impurities and dust part cles that could negatively impact the performance of the system.

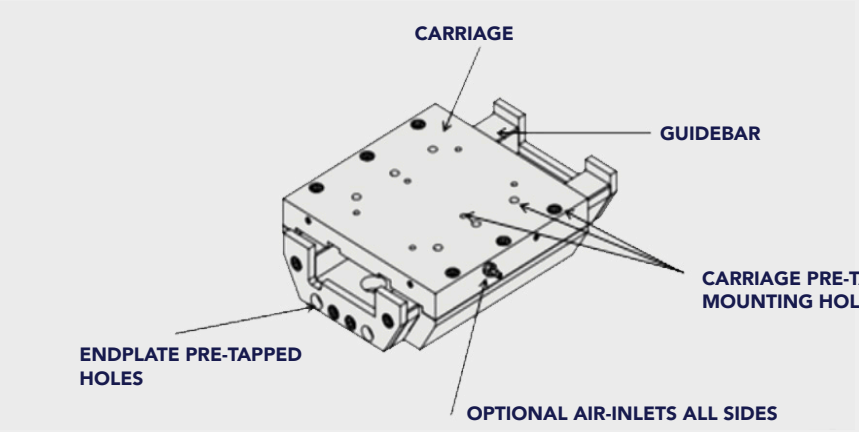

If multiple rail guides are being utilized, it is essential that they are mounted parallel to each other and leveled correctly. Attention should be given to ensuring that the rails are straight and free from any deformities or damages.
To prevent unwanted motion during operation, it is recommended that the guide be secured into a permanent position onto the surface using screws. This will help to ensure the stability of the system and the accuracy of the linear motion. Secure the rail guide onto the surface, mark the locations of the desired rail mounting holes and insert screws into the pre-drilled holes.
To insert the screws onto the carriage, place the linear guide carriage onto the rail or surface where it will be mounted, after locating the pre-drilled mounting holes. Remove the end plate, partially move over the carriage by 50% or more, fasten the screw, shift it in the opposite direction, and repeat the process until it is firmly fastened.

Make sure the position is correct and properly aligned. Hold the carriage in place on the rail/surface with one hand and begin to insert the mounting screws. Insert through holes on the underside of the carriage. Once inserted, tighten appropriately until snug. Over tightening may lead to binding. Test the carriage to ensure there are no wobbles. Adjust as needed via realignment and retightening.
If the linear bearing guide is not moving smoothly, adjust the mounting screws until the guide moves freely as needed. This may indicate tightening of mounting screws has deformed flatness, perpendicularity, or parallelism. If it still doesn't move smoothly, you may need to adjust the rail or the linear bearing guide itself.
Check to make sure all screws and hardware are secure and tighten any that may have come loose during installation.

Box Series

Part Number	Local Straightness	Max. Error	Assembly Height	Total Weight	Z Direction Load	Y Direction Load	Air Flow	Pitch	Roll	Yaw	Y Stiffness	Z Stiffness
BX4040	.25 µm per 25 mm travel	2 µm per 1000 mm travel	80 mm	2.8 kg (6.1 lb) (100 mm travel)	124 lb (551 N)	124 lb (551 N)	4.6 NLPM	78 N-m	78 N-m	78 N-m	183 N/µ	183 N/µ
BX5050	.25 µm per 25 mm travel	2 µm per 1000 mm travel	90 mm	5.76 kg (12.6 lb) (100 mm travel)	356 lb (1583 N)	356 lb (1583 N)	5.1 NLPM	160 N-m	144 N-m	160 N-m	353 N/µ	353 N/µ



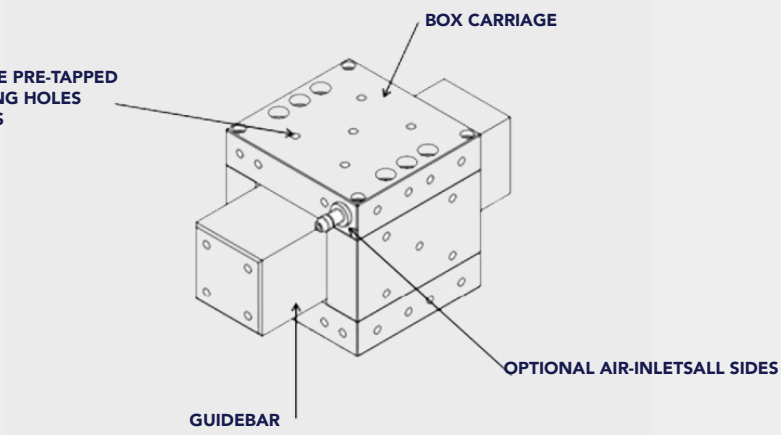

If multiple rail guides are being utilized, it is essential that they are mounted parallel to each other and leveled correctly. Attention should be given to ensuring that the rails are straight and free from any deformities or damages.
Use the pre-drilled mounting holes to stabilize the rail guide onto the surface to prevent unwanted motion during operation. This will help to ensure the stability of the system and the accuracy of the linear motion. Mark the locations of the desired rail mounting holes, secure the rail guide onto the surface, and begin to insert the mounting screws into the pre-drilled holes. Once inserted, tighten appropriately until snug. Overtightening may lead to binding. Test the carriage to ensure there are no wobbles. Adjust as needed via realignment and retightening. Make sure the position is correct and properly aligned. Check to make sure all screws and hardware are secure and tighten any that may have come loose during installation.

U-Series

Part Number	Local Straightness	Max. Error	Assembly Height	Total Weight	Z Direction Load	Y Direction Load	Air Flow	Pitch	Roll	Yaw	Y Stiffness	Z Stiffness
US150150	.25 µm per 25 mm travel	2 µm per 1000 mm travel	68 mm	19 lb	918 lb (4083 N)	230 lb (1023 N)	38 nlpm @100 mm travel	356 N-m	406 N-m	210 N-m	3801 N/µ	4106 N/µ
U-Series Double Carriage												
US150300	.25 µm per 25 mm travel	2 µm per 1000 mm travel	68 mm	35 lb	1830 lb (8140 N)	380 lb (1690 N)	42 NLPM @ 100 mm travel	356 N-m	406 N-m	210 N-m	3801 N/µ	4106 N/µ

T-Series

Firstly, consider the installation area. The area should provide a flat, stable, and unobstructed surface that is free from contaminants. The linear air bearing guides and all related components should be cleaned using only isopropyl alcohol to remove impurities and dust particles that could negatively impact the performance of the system.

Part Number	Local Straightness	Max. Error	Assembly Height	Total Weight	Z Direction Load	Y Direction Load	Air Flow	Pitch	Roll	Yaw	Y Stiffness	Z Stiffness
TS7575	.25 µm per 25 mm travel	2 µm per 1000 mm travel	55 mm	1.37 lb (.62 kg) 100 mm travel	90 lb (400 N)	20 lb (88 N)	1.3 NLPM	11 N-m	19 N-m	33 N-m	28 N/µ	30 N/µ

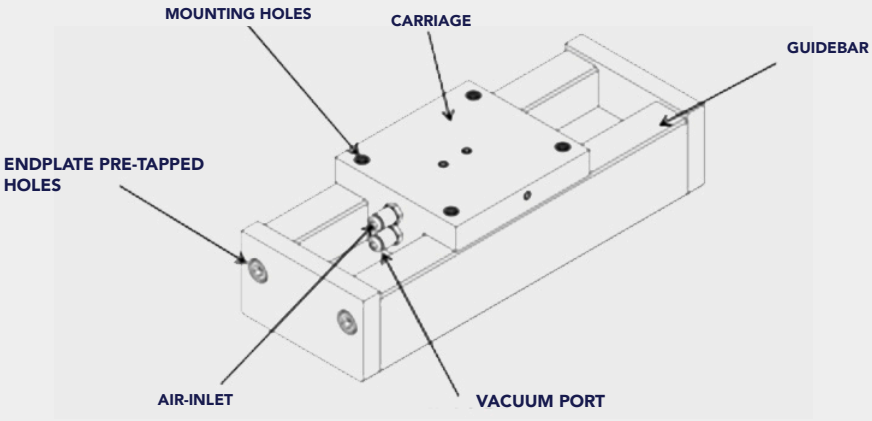

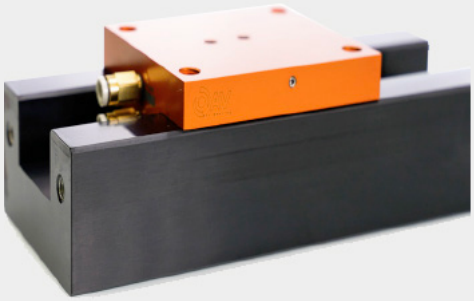

If multiple rail guides are being utilized, it is essential that they are mounted parallel to each other and leveled correctly. Attention should be given to ensuring that the rails are straight and free from any deformities or damages.
To prevent unwanted motion during operation, it is recommended that the guide be secured into a permanent position onto the surface using screws. This will help to ensure the stability of the system and the accuracy of the linear motion. Secure the rail guide onto the surface, mark the locations of the desired rail mounting holes and insert screws into the pre-drilled holes.
To insert the screws onto the carriage, place the linear guide carriage onto the rail or surface where it will be mounted, after locating the pre-drilled mounting holes. Remove the end plate, partially move over the carriage by 50% or more, fasten the screw, shift it in the opposite direction, and repeat the process until it is firmly fastened. If multiple rail guides are being utilized, it is essential that they are mounted parallel to each other and leveled correctly. Attention should be given to ensuring that the rails are straight and free from any deformities or damages.

Use the pre-drilled mounting holes to stabilize the rail guide onto the surface to prevent unwanted motion during operation. This will help to ensure the stability of the system and the accuracy of the linear motion. Mark the locations of the desired rail mounting holes, secure the rail guide onto the surface, and begin to insert the mounting screws into the pre-drilled holes. Once inserted, tighten appropriately until snug. Over tightening may lead to binding. Test the carriage to ensure there are no wobbles. Adjust as needed via realignment and retightening. Make sure the position is correct and properly aligned.

Check to make sure all screws and hardware are secure and tighten any that may have come loose during installation.

CONTACT US
www.oavco.com - Princeton, USA
Email: support@oavco.com
Phone: +1 609 454 5340