

https://www.bowahvacuum.com

info@bowahvacuum.com

Product Description



VPSL series scroll vacuum pump is a completely oil-free and clean vacuum pump. It adopts the most advanced bellows isolation structure in the world to completely isolate the compression chamber and the bearing. It also uses fewer bearings to make the pump quieter and more reliable. At the same time, it can extract non-corrosive organic solvents and has stronger water vapor processing capacity. The VPSL scroll vacuum pump is equipped with an independent controller, which makes the pump more intelligent, and can realize the operation of speed regulation, current limiting, and voltage stabilization of the pump according to the end user's process. Due to the scroll compression and tip seal structure, the pump is not suitable for pumping flammable, explosive, highly corrosive and particle-containing applications.

Working principle

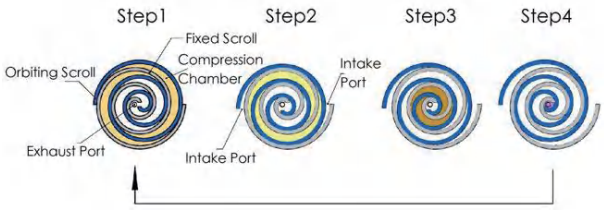

Step1. Gas enters scroll set
Step2. Gas is displaced and...
Step3. ...compressed toward center hub
Step4. Gas exhausted at center hub

Technical Parameters

Data / Model		VPSL10	VPSL15	VPSL36
Displacement	m^3/h	12.2	16.0	36.0
Ultimate vacuum	mbar	0.007	0.01	0.01
Motor power	W	400	400	1200
Voltage input	V	220-240	220-240	220-240
Noise level	dB(A)	53	53	56
Inlet / Outlet flange	—	KF25/KF25	KF25/KF25	KF40/KF25
Max water vapor	g/hr	136	268	270
Leak rate	mbar·l/s	$<1\times10^{-6}$		
Dimension(L×W×H)	mm	438×268×300		517×325×358
Weight	kgs	26	27	47
Cooling	—	air-cooled		
Operating temperature	℃	0~40		

Pumping curve

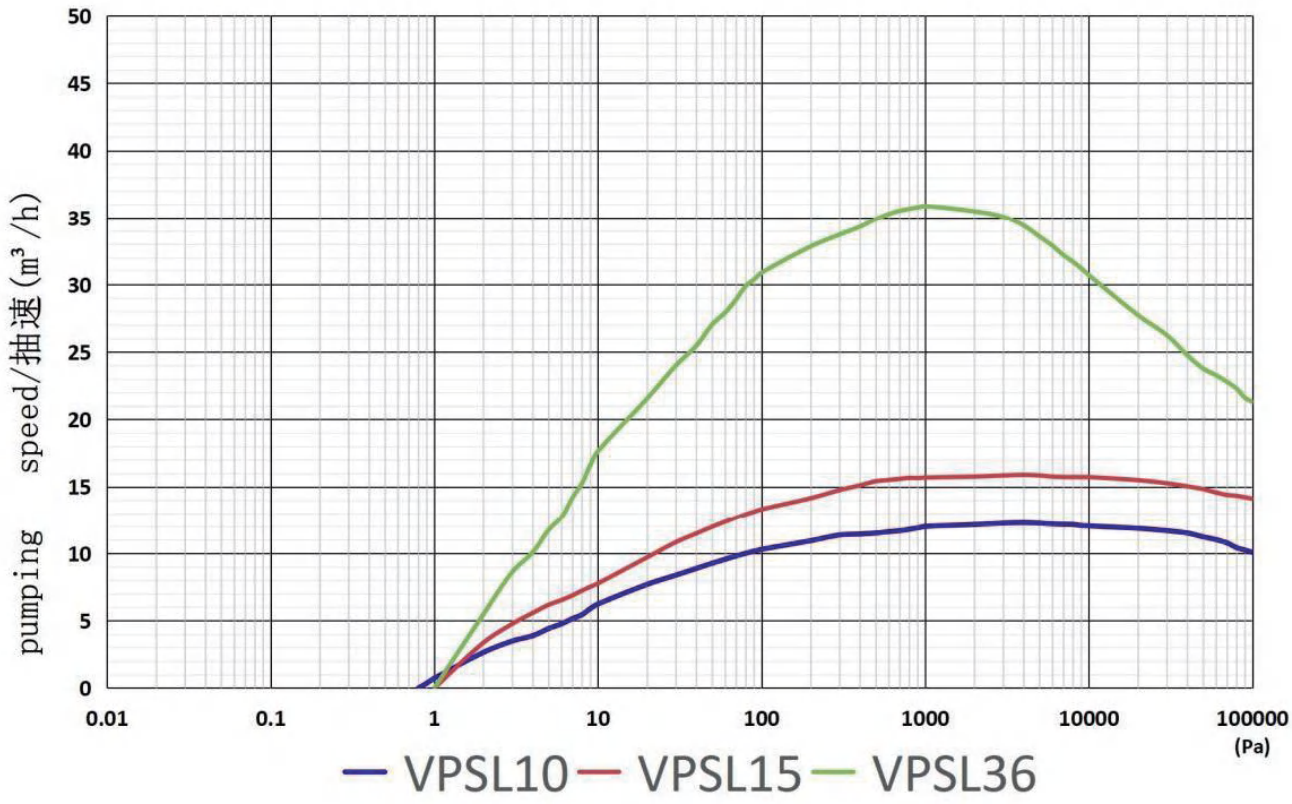

Application

Mass spectrometry (GCMS, LCMS, ICPMS, vacuum leak detection, surface analysis, etc.)
Electron microscope (electron accelerator, electron microscope)
High-energy physics research (beam line, accelerator, microwave system, laser guidance)
Industrial application (freeze dryer, Drying box, glove box, vacuum coating, vacuum degassing, vacuum packaging, vacuum perfusion, refrigerant perfusion, special gas circulation, SF6 recovery, voltage stabilization automation, etc.)
Electronic semiconductors (backing pumps of molecular pumps, Silicon carbide growth furnace, vacuum exhaust station, plasma cleaning, special gas recovery, vacuum drying, etc.)
Laboratory applications (vacuum experimental device, backing pumps of molecular pumps)
Medical equipment (respiratory cancer detector, plasma sterilization, etc.)
Aerospace research (space environment simulation, etc.)

Sectional view

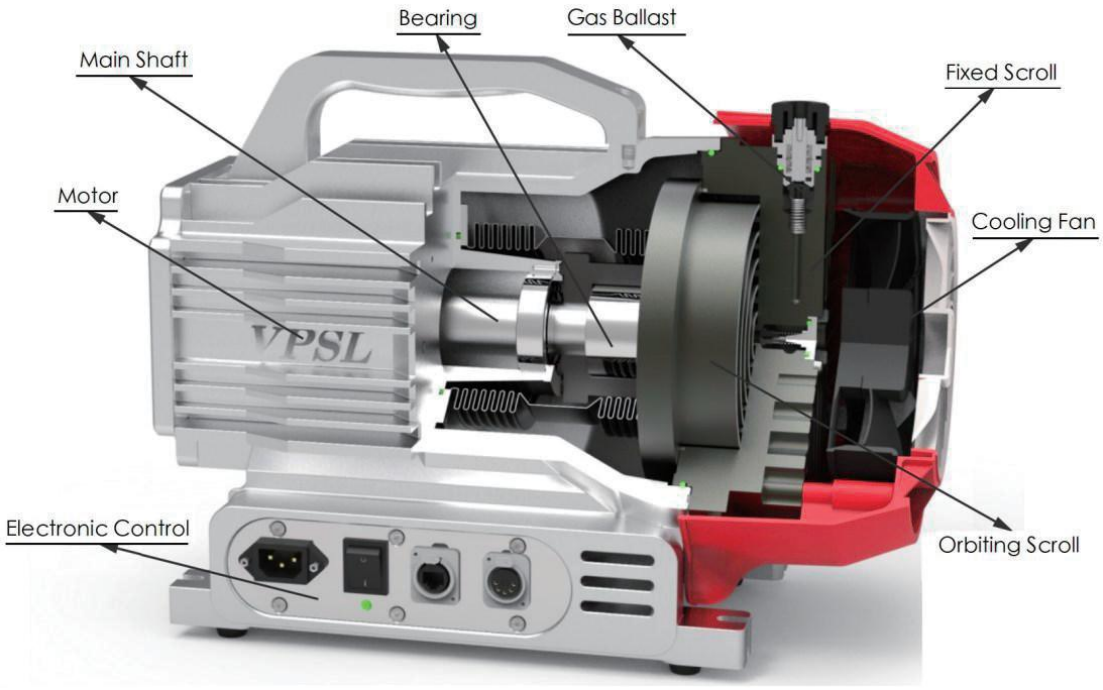

Dimension

VPSL10/15

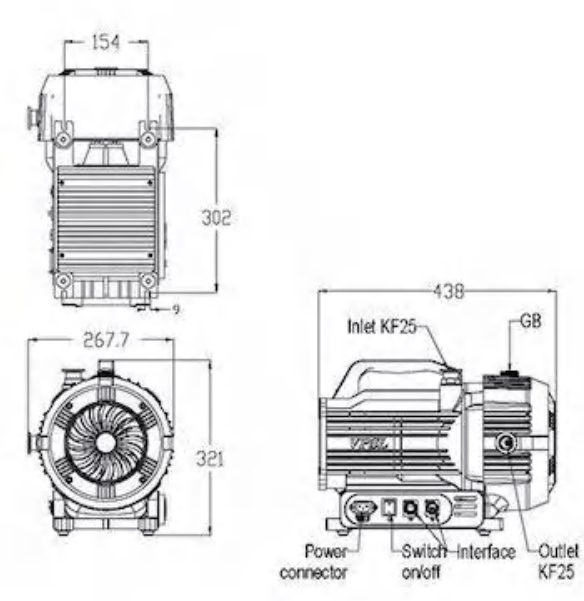

VPSL36

